Shop Skytech at Spotix

Shop Now >

www.FireplaceRemoteControls.com 1.877.374.4404

SKYTECH

1001 - T/LCD

INSTALLATION AND OPERATING INSTRUCTIONS

IF YOU CANNOT READ OR UNDERSTAND THESE INSTALLATION INSTRUCTIONS DO NOT ATTEMPT TO INSTALL OR OPERATE

INTRODUCTION

This remote control system was developed to provide a safe, reliable and user-friendly remote control system for gas heating appliances.

TRANSMITTER

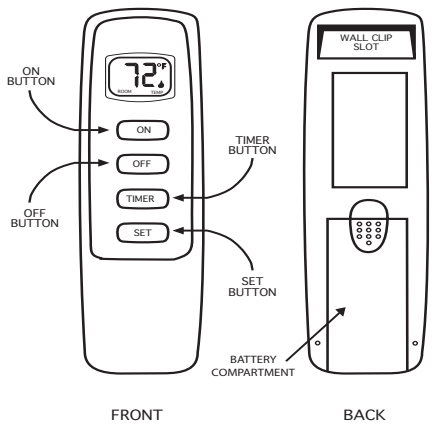

The transmitter operates on (2) 1.5V AAA batteries. It is recommended that ALKALINE batteries always be used for this product. **Be sure the batteries are installed with the (+) and (-) ends facing the correct direction, and are fully charged.**

KEY SETTINGS

1. **ON** - - - Turns appliance on.
2. **OFF** - - Turns appliance off.
3. **TIMER** Changes unit from manual mode to timer mode.
4. **SET** - - Adjusts timer setting.

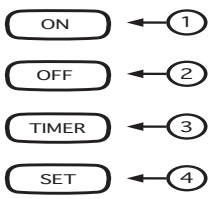

LCD - LIQUID CRYSTAL DISPLAY

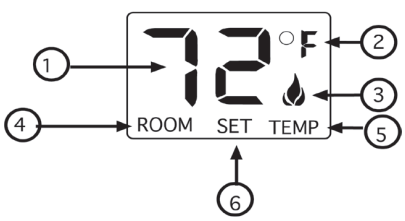

1. Display - - - - - - - - - - Indicates current room temperature.
2. Fahrenheit or Celsius Indicates degrees Fahrenheit or Celsius.
3. Flame - - - - - - - - - - - Indicates appliance is on.
4. Room - - - - - - - - - - - Indicates remote is in thermo mode.
5. Temperature - - - - - - Appears during manual operation.
6. Set - - - - - - - - - - - - - Appears when adjusting the desired timer setting.

SETTING ºFAHRENHEIT / ºCELSIUS SCALE

The factory setting for temperature is ºF. To change the displayed temperature scale, press the **ON** and **OFF** keys at the same time. Follow this same procedure to return to ºF.

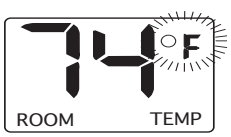

MANUAL FUNCTION

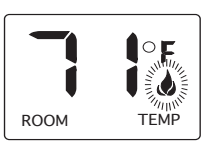

ON MODE

ON OPERATION:
Press the **ON** key to turn the appliance on. (The flame icon will appear on the LCD screen).

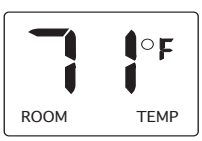

OFF MODE

OFF OPERATION:
Press the **OFF** key to turn the appliance off. (The flame icon will disappear from the LCD screen).

TIMER FUNCTION

- Press the **ON** button to start the appliance.
- Press the **TIMER** button. The LCD screen will show the word set.
- Press the **SET** button until the desired time is reached (15min - 180min in 15 minute increments). The max setting time is 3 hours.
- NOTE: The LCD display will flash the set time for 6 seconds, then start the countdown.
- Press the **OFF** button to turn off the timer, and the appliance.

SET MODE

COUNT DOWN MODE

TEMPERATURE UPDATING FEATURE

This remote control has a temperature updating feature built into its software. The transmitter reads the room temperature every 2 minutes, then updates the room temperature on the LCD screen.

RECEIVER

Install the 4 AA-size batteries supplied with the unit. It is recommended that ALKALINE batteries always be used for this product. **Be sure the batteries are installed with the (+) and (-) ends facing the correct direction.**

The remote receiver has a 3-position slide switch for selecting the mode of operation **ON/REMOTE/OFF**

- **ON**: will manually turn on appliance.
- **REMOTE**: will allow use of handheld transmitter. If the system does not respond to the transmitter on initial use, check the battery positions in the remote. If that does not work, see the SECURITY CODE section.
- **OFF**: will disable the remote receiver.
- **It is suggested that the slide switch be placed in the OFF position if you will be away from your home for an extended period of time.**

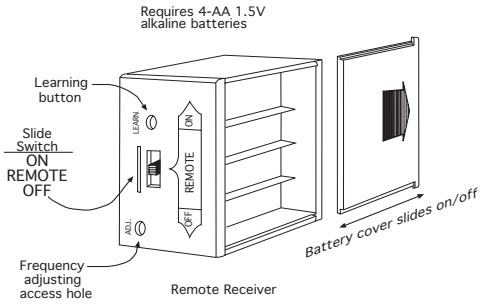

INSTALLATION

The remote receiver can be either wall-mounted in a standard plastic switch box (not metal) or placed on or near the fireplace hearth. Preferably, the remote receiver should be wall-mounted in a plastic switch box, as this will protect its electronic components from the heat produced by the gas appliance. The remote receiver should be kept away from temperatures exceeding 130º F. Battery life is also significantly shortened if batteries are exposed to temperatures 130ºF or higher.

Before installation make sure the remote receiver slide switch is in the **OFF** position. After installation be sure that the slide switch is moved to the **REMOTE** position.

WARNING

This remote control system must be installed exactly as outlined in these instructions. Read all instructions completely before attempting installation. Follow instructions carefully during installation. Any modifications of this remote control or any of its components will void the warranty and may pose a fire hazard.

Consult gas appliance manufacturer's instructions and wiring schematics for proper placement of all wires. All electronic modules are to be wired to manufacturer's specifications.

The following wiring diagrams are for illustration purpose only. Follow instructions from manufacturer of gas valve and/or electronic module for correct wiring procedures. Improper installation of electric components can cause damage to electronic module, gas valve and remote receiver.

MOUNTING THE REMOTE RECEIVER

WALL MOUNT

When wall mounting the remote receiver, longer wires (not included) are required to connect to the gas valve or electronic module. These wires must:

- Be at least 18 Gauge (AWG)
- Be no longer than 20'
- Have no splices

To attach Cover Plate to Receiver Box:

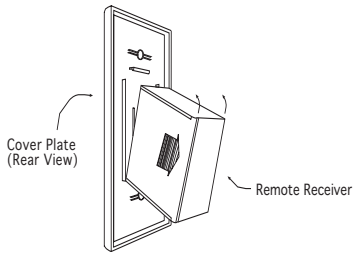

Position the receiver as shown in diagram to the left with lower tab on cover plate inserted into groove of receiver (Make sure ADJ hole and LEARN hole on cover plate properly aligns with remote receiver). Pull receiver up and snap into top tab of cover plate.

Position the cover plate so the word ON is facing up; then, install the remote receiver into the plastic switch-box using the two long screws provided. Push the white button over the receiver slide switch.

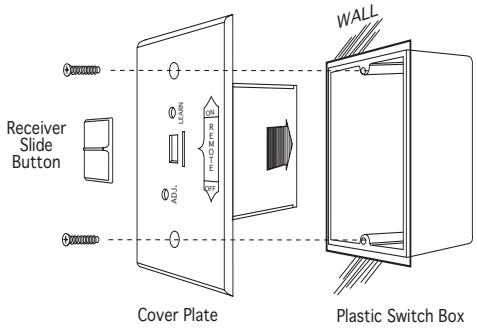

HEARTH MOUNT

- The remote receiver can be placed on the fireplace hearth or under the fireplace behind the control access panel.
- Use the wires attached to the remote receiver to connect to the gas valve or the electric module (piggyback connectors have both male & female terminals for flexibility).
- Be sure that the connectors do not touch each other or other bare metal surfaces; this will cause the appliance to turn on. The connectors may be wrapped with electrical tape to prevent this.

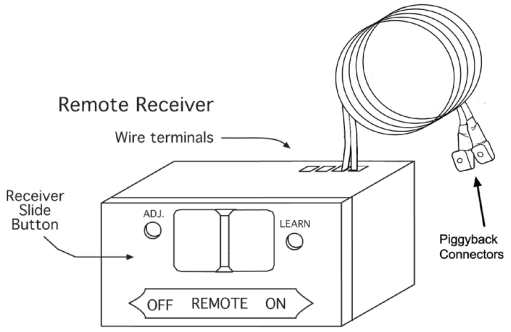

WIRING INSTRUCTIONS

A qualified electrician should install the remote control system.

WIRING MILLIVOLT VALVES

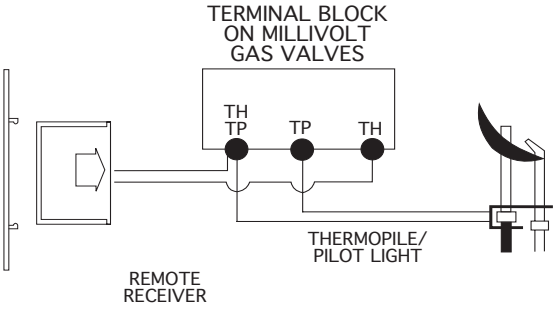

- Connect one wire from the remote receiver to the TH terminal on the gas valve.
- Connect the other wire from the remote receiver to the TH/TP terminal on the gas valve.

MILLIVOLT SYSTEM CHECK

- Ensure that the pilot flame is lit.
- Slide the 3-position button on the remote receiver to the **ON** position. The main gas flame (i.e., the fire) should ignite.
- Slide the button to **OFF**. The main flame should extinguish (the pilot flame will remain on).
- Slide the button to **REMOTE**, then press the **ON** button on the transmitter to change the system to on. The main gas flame should ignite.

WIRING ELECTRONIC SPARK IGNITIONS

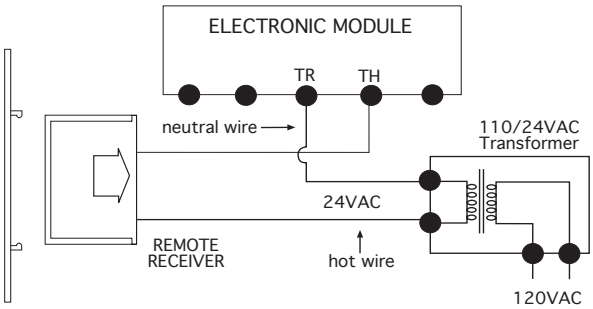

The remote control receiver can be connected, in series, to a 24VAC transformer to the TR (transformer) terminal on the ELECTRONIC MODULE. Connect the hot wire from the 24VAC transformer to either of the wire terminals on the remote receiver. Connect another wire between the other receiver wire terminal and the TH (thermostat) terminal on the ELECTRONIC MODULE.

ELECTRONIC SPARK SYSTEM CHECK

- Slide the 3-position button on the remote receiver to the **ON** position. The spark electrode should begin sparking to ignite the pilot. After the pilot flame is lit, the main gas valve should open and the main gas flame should ignite.
- Slide the button to **OFF**. The main gas flame and pilot flame should both extinguish.
- Slide the button to **REMOTE**, then press the **ON** button on the transmitter to change the system to on. The spark electrode should begin sparking to ignite the pilot. After the pilot is lit, the main gas valve should open and the main gas flame should ignite.

CP (CHILDPROOF) FEATURE

This remote control includes a childproof feature that allows the user to “lock-out” operations from the Transmitter.

- To activate and de-activate the childproof feature, press and hold the **ON** button and the **TIMER** button at the same time for 5 seconds. The letters “CP” will appear in the TEMP frame on the LCD screen when childproof mode is activated.
- “CP” will appear on the LCD screen if any button is pressed while childproof mode is engaged.
- When this mode is engaged, all auto settings go on without interruption (like thermostat). Only manual functions are prevented.

SECURITY CODES

This transmitter has one of 1,048,576 unique security codes. It may be necessary to program the remote receiver to learn the security code of the transmitter upon initial use, if batteries are replaced, or if using a replacement transmitter.
NOTE: This receiver can hold up to 3 transmitter codes. This is for the times when a second hand held transmitter or a wall transmitter is required.

- Make sure the receiver's slide switch is in the **REMOTE** position.
- Press and release the **LEARN** button on the receiver.
- When you hear the "Beep", press and hold the **ON** or **OFF** button for about 2 seconds on the transmitter.
- You will then hear a series of beeps that indicate that your new transmitter has been accepted by the receiver.
- If you press the **LEARN** button on the receiver and you hear no beeps, the receiver is unable to retain any more transmitter codes (make sure that the transmitter and the receiver batteries are properly installed and fully charged).
- To delete all of the transmitter codes on your receiver, press and hold the **LEARN** button for 10 seconds. Then you will hear a series of beeps, indicating that the receiver's memory has been cleared.

COMMUNICATION - SAFETY - TRANSMITTER - (C/S - T/X)

This remote control has a COMMUNICATION –SAFETY function built into its software to ensure the transmitter and receiver are communicating normally.

In all operating modes, the transmitter sends an RF signal every fifteen minutes to the receiver indicating that the transmitter is within the normal operating range of 20 feet. Should the receiver NOT receive this signal, the receiver will begin a 2 hour countdown. If the receiver does not receive a signal from the transmitter in 2 hours, the receiver will shut off the appliance. The receiver will then emit a series of rapid "beeps" for a period of 10 seconds. Then after 10 seconds of rapid beeping, the receiver will continue to emit a single "beep" every 4 seconds until a transmitter **ON**, **OFF** or **MODE** Button is pressed to reset the receiver.

TRANSMITTER WALL CLIP

The transmitter can be hung on a wall using the clip provided.

- Wood - Drill 1/8'' pilot holes and install with screws provided.
- Plaster/Wallboard - Drill 1/4'' holes, then install with the screws provided.

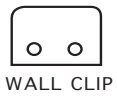

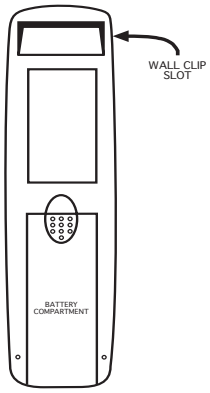

BATTERY LIFE

Life expectancy of the alkaline batteries in the transmitter and receiver should be at least 12 months. Check and replace all batteries:

- Annually.
- When operating range becomes reduced.
- When transmissions are not received by the remote receiver.
- If the remote receiver batteries measure less than 5.3 volts (all four batteries in combination).
- If the hand held transmitter batteries measure less than 2.5 volts (both batteries in combination).

TROUBLE SHOOTING

If you encounter problems with your fireplace system, the problem may be with either the fireplace itself or with this remote. Review the fireplace manufacturer's operation manual to make sure all connections are properly made. Then check the operation of the remote in the following manner:

- Make sure all batteries are correctly installed in the transmitter and receiver. Also check if the batteries are fully charged.
- Check batteries in transmitter to make sure contacts are touching (+) and (-) ends of battery. Bend metal contacts in for tighter fit.
- Be sure receiver and transmitter are within 20'-25' operating range.
- Keep receiver from temperatures exceeding 130 degrees F. Battery life will be shortened if exposed to high temperatures.
- If receiver is installed in a tightly enclosed metal surrounding, the operating distance will be shortened.
- Make sure the hand-held transmitter and remote receiver are communicating properly (See SECURITY CODES section).

FCC REQUIREMENTS

NOTE: THE MANUFACTURER IS NOT RESPONSIBLE FOR ANY RADIO OR TV INTERFERENCE CAUSED BY UNAUTHORIZED MODIFICATIONS TO THIS EQUIPMENT. SUCH MODIFICATIONS COULD VOID THE USER'S AUTHORITY TO OPERATE THE EQUIPMENT.

FOR TECHNICAL SERVICE, CALL:

U.S. INQUIRIES
888/672 - 8929 OR 260/459 - 1703

CANADIAN INQUIRIES
877/472 - 3923

WEB SITE: www.skytechsystem.com

SANTA'S HELPER

This special offer is only provided to customers of Skytech II, Inc. that have purchased a remote control for their Hearth Product. This remote control system can be used for any 110Volt appliance, but perfect your Christmas Tree Lights or any other appliance that is difficult to reach or plug in. Simply plug the receiver into your wall outlet and your appliance into the receiver, push the ON button on the transmitter and you are in business. It's that easy.

Santa's helper is a unique and specialized device designed to save time and effort. Every christmas brings in the challenge of plugging in the lights on the tree. But this year can be different. Simply plug the remote directly into a standard 110 household electrical outlet and plug your light directly into the receiver. You can even use a extension cord for convenience. Then with a simple push of a button on the transmitter, your lights are turned on and off with ease.

From as far away as 100 feet, the radio frequency controls what is plugged into only the receiver. With over 255 security codes, no other appliances will be effected. And best of all, you don't even have to point the remote at the receiver.

Features:

- 110 VAC - Input, 2 prong polarized plug
- 110 VAC Output, 2 prong polarized receptacle
- 1000 Watts of rated power or 1/4 HP motor.
- Transmitter is battery operated (12 Volt included).
- 255 Security Codes.
- 100ft of operational distance
- All radio frequency
- UL and FCC approved

The list price of $29.95 for the Santa's Helper has been cut almost in half to $15.00 USD for this exclusive offer. Shipping and handling of $5.00 $USD should be added. Send your check, money order or your Visa / MasterCard number, with Expiration Date to our office, along with the warranty information from your remote control for your Hearth Product. You can send this via mail, fax, or e-mail.

Skytech II, Inc.
9230 Conservation Way
Fort Wayne, IN 46809
1 (888) 672-8929
1 (888) 672-8024 Fax
skytechsystem@fwin.net e-mail

Limited Lifetime Warranty

SKYTECH II warrants the SKYTECH REMOTE CONTROL SYSTEM for a Limited Lifetime of the original owner of this system. This warranty is not transferable to another person it is for the original purchaser of the product. Should any part fail because of defective workmanship or material from the original date of purchase. SKYTECH II will repair or, at SKYTECH II option, replace the defective parts.

Replacement parts will be available at no charge for the first (5) five years of this warranty, and will be available at market cost for the Lifetime of the product to that original owner. If SKYTECH II does not have the parts for an individual model, then a replacement SYSTEM will be provided. At no charge for the first (5) five years and sold at market cost for the Lifetime of that product to the original owner.

The Owner must provide a bill of sale, cancelled check, or payment record should be kept to verify purchase date and establish warranty period. Travel, diagnostic cost, service labor to repair the defective SYSTEM, and freight charges on warranty parts to and from the factory will be the responsibility of the owner. SKYTECH will not be responsible for labor charges and/or damage incurred in installation, repair, replacement, or for incidental or consequential damages. Batteries and any damage caused by them are not covered by this warranty.

This warranty does not cover claims, which do not involve defective workmanship or materials.

Damage to the SYSTEM caused by accident, misuse, abuse, or installation error, whether performed by a contractor, Service Company, or owner, is not covered by this warranty. Modification of the SKYTECH product will void this warranty.

IN NO EVENT SHALL SKYTECH BE LIABLE FOR INCIDENTAL AND CONSEQUENTIAL INCLUDING THE IMPLIED WARRANTIES OF MERCHANTABILITY AND FITNESS, ARE LIMITED TO THE DURATION OF THIS WRITTEN WARRANTY. THIS WARRANTY SUPERSEDES ALL OTHER ORAL OR WRITTEN WARRANTIES.

Some States do not allow the exclusion or limitation of incidental and consequential damages or limitation on how long an implied warranty lasts, so the above limitation may not apply to you. This warranty gives you specific rights and you may have other rights, which vary from state, province, and nation.

How to Obtain Service:
Contact SKYTECH II or your SKYTECH Dealer direct with the following information:

- Name, Address, Telephone Number of Owner.
- Date of Purchase, Proof of Purchase.
- Model Name, Date Code.
- Any relevant information or circumstances, e.g., installation, mode of operation when defect was noted.

Warranty claim process will start with all of this information. SKYTECH will reserve the right to physically inspect the product for defects, by authorized representatives.

Detach at this line for return to: Skytech II 9230 Conservation Way, Fort Wayne, IN 46809 Telephone: (888) 672-8929

Purchase Date: _____ Model: _____ Date Code: _____

Purchase From: _____ Date: _____

Customer Name: _____ Number of Santa's Helpers: _____

Address: _____

City: _____ State/Prov. _____ Zip/Postal Code: _____

Credit Card Number: _____ Expiration Date: _____
(Visa and Mastercard only)

See next page for a special offer for all remote control customers.